RRC-1
Roof Clips

1

- Determine heating cable layout and clip placement

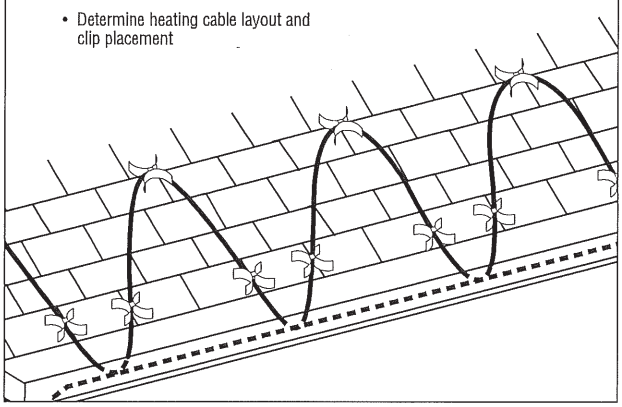

2

- Apply sealant, appropriate for your roof, to back side of clip where nail or screw will be used.

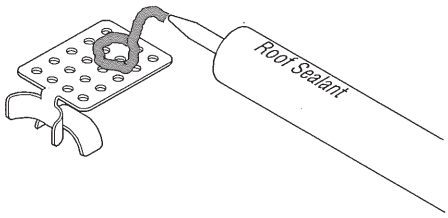

3

- Orient the clip as needed.
- Attach clip to roof using nails or screws.

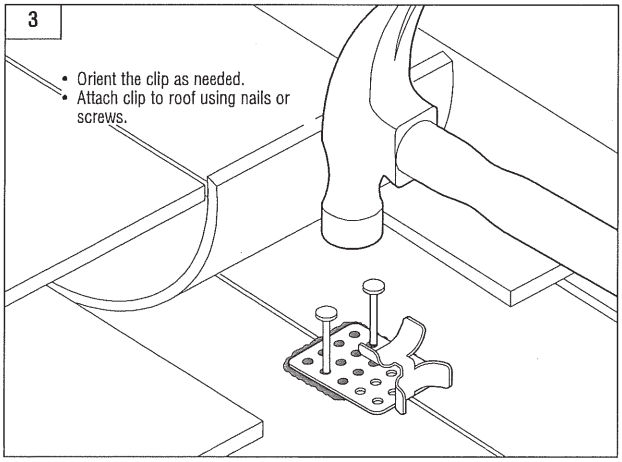

4

- Orient the clip as needed.
- Spread sealant on top of nail or screw heads.

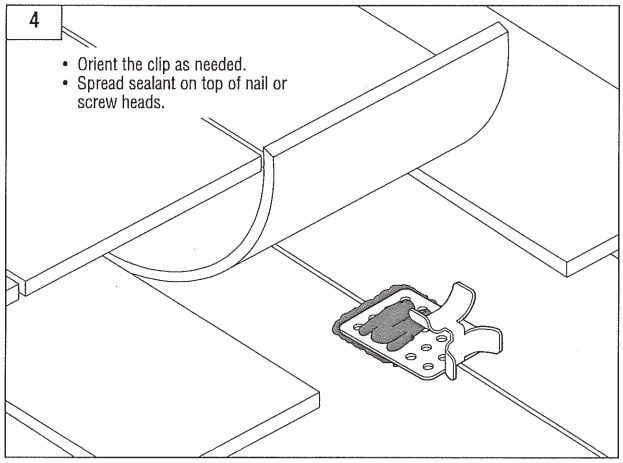

5

- Install heating cable.
- Use pliers to close clamps, but do not crush the heating cable.

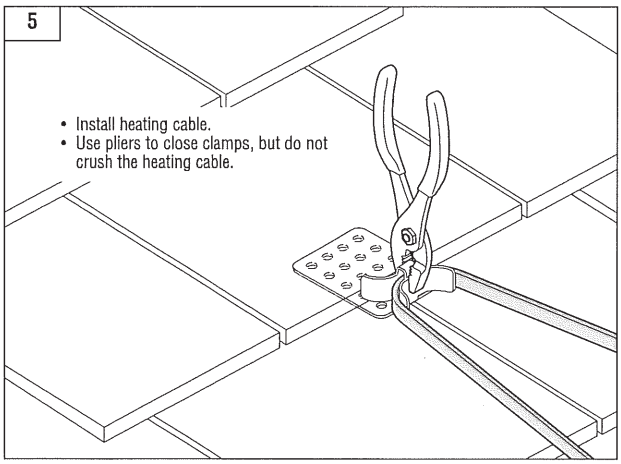

Made in the USA