Heat Trace Products, LLC

ISO 9001 REGISTERED

Design Guide and Installation Details for Self-Regulating Heating Cable

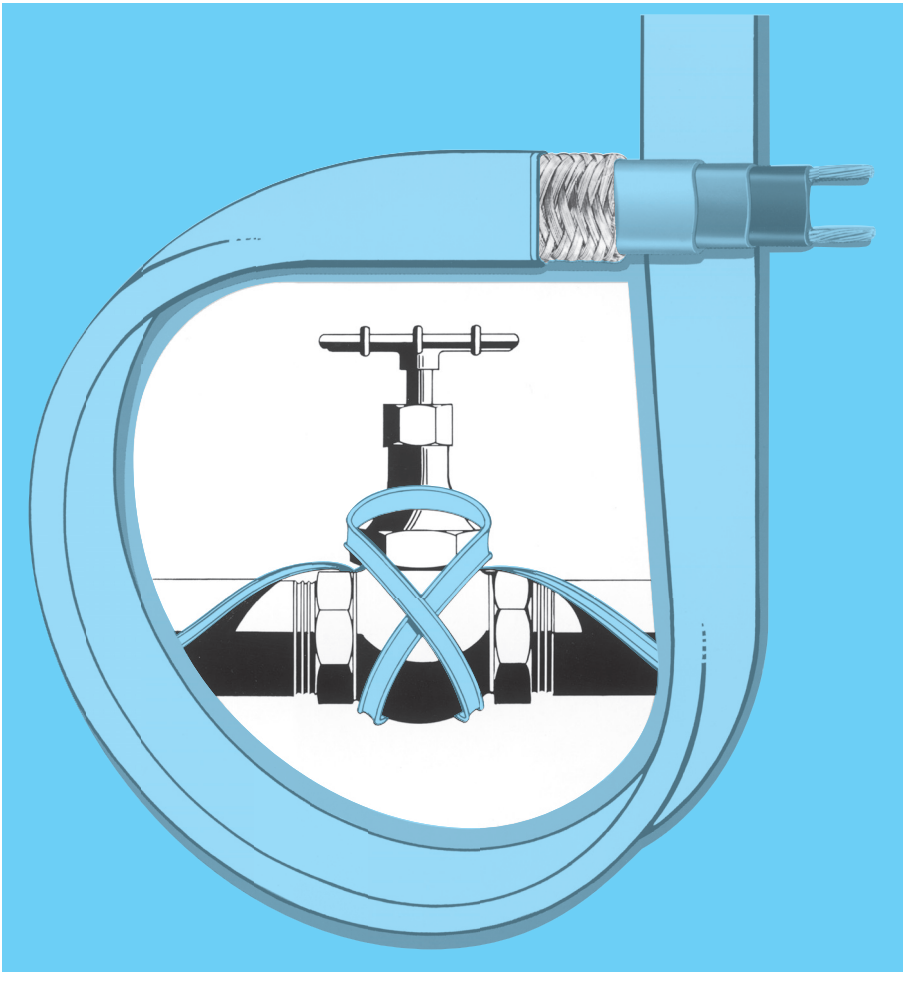

Self-Regulating Heating Cables

Design Guide and Installation Details for Self-Regulating Heating Cable

The RSCC 2700 self-regulating heating cable is available with either a tinned copper or stainless steel overshield. Factory Mutual approved for use in Class I, Division 2, Groups B, C, and D; Class II, Division 2, Group G; Class III, Division 2 areas. It is rated for T5 per NEC. Meets or exceeds requirements of IEEE Electrical Resistance Heat Tracing Specifications. The RSCC 2300 self-regulating heating element is available with either a tinned copper or stainless steel overshield. Factory Mutual approved for use in Class I, Division 2, Groups B, C, and D; Class II, Division 2, Group G; Class III, Division 2 areas. It is rated for T3 per NEC and meets or exceeds requirements of IEEE Electrical Resistance Heat Tracing Specifications.

Use of Ground Fault Protective Devices

Caution . . . N.E.C. CODE 1996 STATES IN ARTICLE 427-22: 'Ground-fault protection of equipment shall be provided for each branch circuits supplying electric heating equipment.'

Factory Mutual approvals require the use of RSCC components and accessories

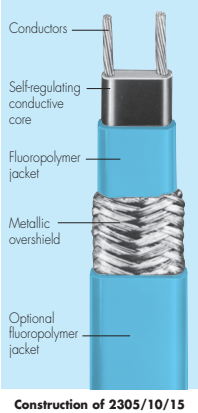

Construction of 2305/10/15

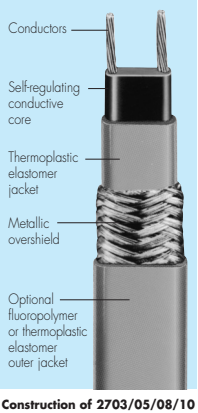

Construction of 2703/05/08/10

Accesories

1548-40PTP
Electrical Connection Kit

1548-40PTJ
Electrical Connection Kit with Junction Box

SRHC-ES
End Seal Kit

1528-01019
Fiberglass Adhesive Tape .5" x 108'. 185°C

1528-01017
Fiberglass Adhesive Tape .5" x 108'. 130°C

1528-0A018
Aluminum Tape 2.5" x 108', 2 mil thick

1600-XXXXX
Thermostats NEMA 4X and NEMA 7 Ambient and Line Sensing

How to order 23/27 [ ][ ] - [ ][ ][ ] 0 0

Watts/Ft.	Service	Electrical Class	Overshield Material
05 = 5 10 = 10 15 = 15	1 = 120 VAC 2 = 240 VAC	1 = Ordinary and Div. 2 3 = Ordinary and Div. 2 with Monitor Wires	C = Tinned Copper S = Stainless Steel T = Tinned Copper Fluoropolymer Jacket

Watts/Ft.	Service	Electrical Class	Overshield Material
03 05 08 10	1 = 120 VAC 2 = 240 VAC	1 = Ordinary and Div. 2 3 = Ordinary and Div. 2 with Monitor Wires	C = Tinned Copper S = Stainless Steel T = Tinned Copper w/Fluoropolymer Jacket N = Tinned Copper w/Thermoplastic Elastomer Jacket

Electrical Specifications	2703-1	2703-2	2705-1	2705-2	2708-1	2708-2	2710-1	2710-2	2305-1	2305-2	2310-1	2310-2	2315-1	2315-2
Service Voltage (Volts)	120	240	120	240	120	240	120	240	120	240	120	240	120	240
Maximum Circuit Length (Feet)	330	660	270	540	210	420	180	360	240	480	180	280	135	200
Thermal Rating at 50-F (Watts/FT.)	3	3	5	5	8	8	10	10	5	5	10	10	15	15
Temperature Rating														
Maximum Maintain (Deg. F)	150	150	150	150	150	150	150	150	250	250	250	250	250	250
Maximum Exposure (Deg. F)	185	185	185	185	185	185	185	185	366	366	366	366	366	366

Introduction

Principle of Operation

RSCC self-regulating heating cables regulate their heat output in response to changes in temperature. The highly engineered conductive core increases its heat output when the temperature falls and decreases its heat output when the temperature rises.

To help protect against impact and mechanical abuse, these heating cables have a metallic overshield. These heating cables are Factory Mutual approved for use in hazardous areas.

This design guide was compiled to offer a simplified systematic approach for designing pipe heat tracing systems utilizing the RSCC self-regulating heating cables.

The following step-by-step procedures will enable you to determine the length of heating cable required to efficiently heat trace pipes, valves and flanges.

Alternate Voltages

RSCC 240 VAC self-regulating heating cables can be operated at alternative voltages. The chart below compares heating cable power output with product rating.

Power Adjustment Factor

Part No.	208 Volts	277 Volts
2703-2	.75	1.28
2705-2	.86	1.16
2708-2	.91	1.10
2710-2	.93	1.08
2305-2	.78	1.25
2310-2	.86	1.16
2315-2	.92	1.09

Example:

Thermal output of 2705-2 5 Watts/Ft. at 50°F, powered at 208 VAC = 5 Watts/Ft. x .86 = 4.3 Watts/Ft.

Table 1 — Thermal Conductivity (K_t) of Typical Pipe Insulating Materials

Insulating Material	K Factor @ 50°F Mean Temperature (BTU/HR-FT²-°F/Ft.)
Glass Fiber	.021
Calcium Silicate	.031
Foamed Urethane	.014
Foamed Rubber	.025
Mineral Fiber	.027
Foamed Glass	.031
Perlite (Expanded Silicate)	.040

Graph 1 — Heater Power Output

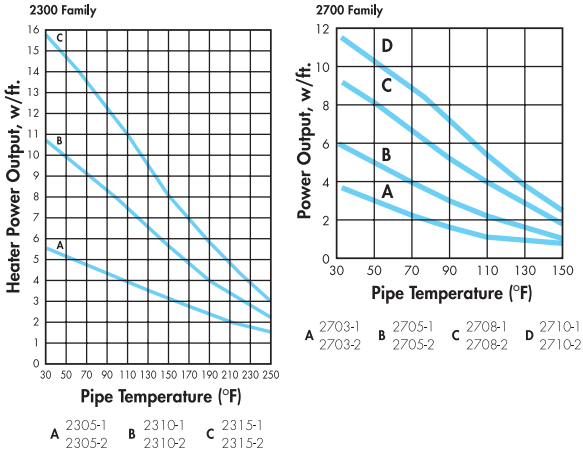

Heat Tracing Pipe

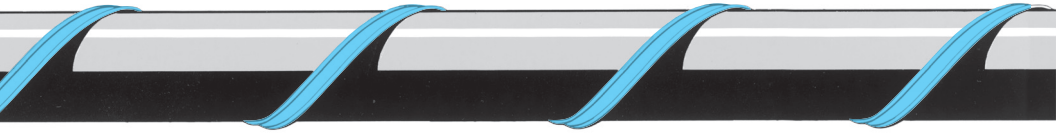

To determine the pitch and amount of RSCC self-regulating heating cable required to heat trace a pipe, you'll need to know the pipe temperature to be maintained, minimum ambient temperature, pipe size and insulation type and thickness.

Calculating Heat Loss

1. First determine temperature difference (**ΔT**) between temperature to be maintained (T_m) and minimum ambient temperature (T_a).
   $\Delta T = T_m - T_a$.
2. Select insulation K factor from Table 1 (K_i) and divide by .021 to determine conductivity ratio (**R_k**).
   $R_k = K_i \div .021$.
3. Determine heat loss from Table 2A (**Q_a**) by selecting pipe size and insulation thickness. If piping is indoors multiply (Q_a) by 0.9.
4. Calculate heat loss from pipe (**Q_p**) by multiplying ΔT by R_k and Q_a.
   $Q_p = \Delta T \times R_k \times Q_a$.

Determine Heater Power Output

From Graph I (page 3) select the heater with the power output (Q_h) which meets or exceeds the heat loss (Q_p) from the pipe. For non-metal pipe multiply the power output Q_h from the chart by 0.7 before selecting the heater.

In some circumstances it may be desired to use a heater with less power output per foot of heater than the calculated heat loss per foot of pipe. In these cases, the heater can be spiralled onto the pipe to achieve the required power output per foot of pipe. A developed power ration and heater pitch will need to be determined.

Calculate Developed Power Ratio

To calculate developed power ratio (**R_p**) divide heat loss from pipe (Q_p) by heater power output (Q_h).
$R_p = Q_p \div Q_h$.

Determine Heater Pitch

To determine the required pitch (**P**), select value from Tables 3A and 3B for calculated value of (R_p) and pipe size.

Calculate Required Heater Length

To determine required heater length (**L_h**), multiply length of pipe (L_p) by (R_p).
$L_h = L_p \times R_p$.

Table 2A — Heat Loss (Q_a) from Insulated Pipe (Watts/Foot-°F).

Pipe Size (IPS)	Pipe O.D. (Inches)	Insulation Thickness						
		1/2"	1"	1-1/2"	2"	2-1/2"	3"	4"
1/2	0.840	.05	.04	.03	.03	—	—	—
3/4	1.050	.06	.04	.03	.03	—	—	—
1	1.315	.07	.05	.04	.03	.03	—	
1-1/2	1.900	.09	.06	.04	.04	.03	—	—
2	2.375	.11	.07	.05	.04	.04	—	—
2-1/2	2.875	.13	.08	.06	.05	.04	—	—
3	3.500	.16	.09	.07	.05	.05	—	—
3-1/2	4.000	.18	.10	.07	.06	.05	.05	—
4	4.500	.20	.11	.08	.06	.06	.05	.04
6	6.625	.28	.15	.11	.09	.07	.06	.05
8	8.625	.35	.19	.13	.10	.09	.08	.06
10	10.750	.44	.23	.16	.13	.10	.09	.07
12	12.750	.51	.27	.19	.14	.12	.10	.08
14	14.000	.56	.29	.20	.16	.13	.11	.09
16	16.000	.64	.33	.23	.18	.15	.12	.10
18	18.000	.71	.37	.25	.20	.16	.14	.11
20	20.000	.79	.41	.28	.21	.18	.15	.12
24	24.000	.94	.48	.33	.25	.21	.18	.14

Values given above are heat loss for metal pipe in units of Watts/Foot of pipe per °F temperature difference from pipe to ambient temperature fiberglass insulation.

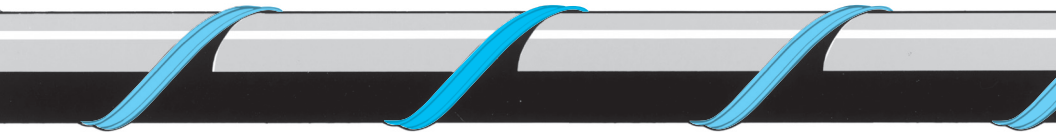

Table 3A — Pitch in Inches of Heater Wrap on Pipe for Given Heat Loss/Developed Power Ratios of 1.1-2.0

Pipe Size (IPS)	Pipe O.D. (Inches)	Heat Loss/Developed Power Ratio									
		1.1	1.2	1.3	1.4	1.5	1.6	1.7	1.8	1.9	2.0
1/2	0.840	6	4	3	3	3	2	2	—	—	—
3/4	1.050	7	5	4	4	3	3	2	2	2	2
1	1.315	9	6	5	4	4	3	3	3	2	2
1-1/4	1.660	11	8	6	5	5	4	4	3	3	3
1-1/2	1.900	13	9	7	6	5	5	4	4	4	3
2	2.375	16	11	9	7	6	6	5	5	4	4
2-1/2	2.875	20	14	11	9	8	7	6	6	5	5
3	3.500	24	17	13	11	10	9	8	7	7	6
3-1/2	4.000	27	19	15	13	11	10	9	8	8	7
4	4.500	31	21	17	14	13	11	10	9	9	8
5	5.563	38	26	21	18	16	14	13	12	11	10
6	6.625	45	31	25	21	18	17	15	14	13	12
8	8.625	59	41	32	27	24	22	20	18	17	15
10	10.750	74	51	41	34	30	27	25	23	21	19
12	12.750	87	60	48	41	36	32	30	27	25	23
14	14.000	96	66	53	45	39	35	32	29	27	25
16	16.000	110	76	61	51	45	40	37	34	31	29
18	18.000	123	89	68	58	51	45	41	38	35	33
20	20.000	137	95	76	64	56	50	46	42	39	36
24	24.000	164	114	91	77	67	60	55	50	47	43

Table 3B — Pitch in Inches of Heater Wrap on Pipe for Given Heat Loss/Developed Power Ratios of 2.2-4.0

Pipe Size (IPS)	Pipe O.D. (Inches)	Heat Loss/Developed Power Ratio									
		2.2	2.4	2.6	2.8	3.0	3.2	3.4	3.6	3.8	4.0
2	2.375	4	3	3	3	3	2	2	2	2	2
2-1/2	2.875	5	4	4	3	3	3	3	3	2	2
3	3.500	6	5	5	4	4	3	3	3	3	3
3-1/2	4.000	6	6	5	5	4	3	3	3	3	2
4	4.500	7	6	6	5	5	5	4	4	4	4
5	5.563	9	8	7	7	6	6	5	5	5	4
6	6.625	11	10	9	8	7	7	6	6	6	5
8	8.625	14	12	11	10	9	9	8	8	7	7
10	10.750	17	15	14	13	12	11	10	10	9	8
12	12.750	20	18	17	15	14	13	12	12	11	10
14	14.000	22	20	18	17	15	14	13	13	12	11
16	16.000	26	23	21	19	18	16	15	14	14	13
18	18.000	29	26	23	21	20	18	17	16	15	14
20	20.000	32	29	26	24	22	21	19	18	17	16
24	24.000	38	35	31	29	27	25	23	22	20	19

Heat Loss/Developed Power Ratios should be rounded to the next highest value.
Heat Loss/Developed Power Ratios less than 1.1, run the heating cable parallel to the pipe.

Example: (2700 Heater)

T_a = -20°F
T_m = 40°F
Insulation — Calcium Silicate
Pipe Material — Metal
Insulation Thickness — 2"
Length of Pipe — 100'

Step I $\mathbf{\Delta T} = T_m - T_a$
$= 40 - (-20)$
$= 60$

Step II $\mathbf{R_k} = K \div .021$
$= .031 \div .021$
$= 1.48$

Step III $\mathbf{Q_a}$ from Table 2A for 6 IPS pipe and 2" thick insulation is .09.

Step IV $\mathbf{Q_p} = T \times R_k \times Q_a$
$= 60 \times 1.48 \times .09.$
$= 8.0$

Step V From Graph 1, at 40°F the 2708 heater produces Q_i of 8.5 watts per foot. Select the 2708 heater for this application.

Alternate Heater by Spiralling

Assume that for the above example you wish to use a 2705 heater.

The Q_i, from Graph 1, at 40°F for the 2705 heater is 5.5 watt per foot.

Step VI $\mathbf{R_p} = Q_p \div Q_h$
$= 8.0 \div 5.5$
$= 1.46$

Step VII The pitch, P, in inches from Table 3A for 6 IPS and R_p = 1.46 is 14 inches

Step VIII $\mathbf{L_h} = L_p \times R_p$
$= 100' \times 1.46$
$= 146'$ cable length required.

Heat Tracing Valves

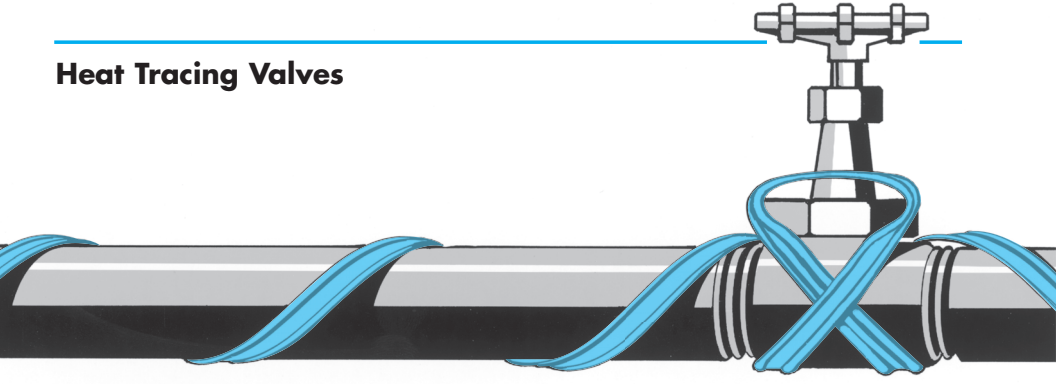

To determine the amount of RSCC self-regulating heating cable required to heat trace a valve, you'll need to know the pipe temperature to be maintained, minimum ambient temperature, valve size and insulation type and thickness.

Calculating Heat Loss

1. First determine temperature difference (**ΔT**) between temperature to be maintained (T_m) and minimum ambient temperature (T_a). $\Delta T = T_m - T_a$.
2. Select insulation K factor from Table 1 (K_i) and divide by .021 to determine conductivity ratio (**R_k**). $R_k = K_i \div .021$.
3. Determine heat loss from Table 2B (**Q_b**) by selecting valve size and insulation thickness. If valve is indoors multiply (Q_b) by 0.9.
4. Calculate heat loss from pipe (**Q_v**) by multiplying ΔT by R_k and Q_b. $Q_v = \Delta T \times R_k \times Q_b$.

Determine Heater Power Output

From Graph I determine heater power output for pipe temperature to be maintained (**Q_h**). If valve is non-metal multiply value of Q_h from graph by 0.7.

Calculate Developed Power Ratio

To calculate developed power ratio (**R_p**) divide heat loss from valve (Q_v) by heater power output (Q_h). $R_p = Q_v \div Q_h$.

Table 2B — Heat Loss (Q_b) from Insulated Valves (Watts/°F)

Valve Size (Inches)	Insulation Thickness					
	1/2"	1"	1-1/2"	2"	3"	4"
1/2	.30	.16	.11	.09	.07	.04
3/4	.31	.16	.12	.10	.07	.05
1	.35	.18	.13	.10	.08	.05
1-1/2	.44	.23	.16	.13	.10	.06
2	.49	.26	.18	.14	.11	.07
2-1/2	.56	.29	.21	.16	.12	.08
3	.64	.34	.24	.19	.14	.09
3-1/2	.71	.37	.26	.21	.16	.10
4	.77	.41	.29	.23	.17	.11
6	1.06	.56	.40	.31	.23	.16
8	1.33	.71	.50	.40	.29	.19
10	1.67	.88	.62	.49	.37	.24
12	2.07	1.09	.77	.61	.46	.30
14	2.32	1.23	.86	.69	.51	.34
16	2.61	1.44	1.01	.80	.60	.40
18	2.99	1.65	1.16	.92	.69	.46
20	3.24	1.86	1.31	1.04	.78	.51
24	3.98	2.28	1.61	1.28	.96	.63

Calculate Required Heater Length

To determine required heater length (**L_h**), multiply number of valves (N_v) by (R_p). $L_h = N_v \times R_p$.

Example: (2708 Heater)

T_a = -20°F
T_m = 40°F
Insulation — Calcium Silicate
Valve Size — 6 IPS
Insulation Thickness — 2"
Number of Valves — 2

Step I $\Delta T = T_m - T_a$
$= 40 - (-20)$
$= 60$

Step II **R_k** $= K \div .021$
$= .031 \div .021$
$= 1.48$

Step III **Q_a** from Table 2B for 6" valve and 2" thick insulation is .31.

Step IV **Q_v** $= \Delta T \times R_k \times Q_b$
$= 60 \times 1.48 \times .31.$
$= 27.5$

Step V **Q_h** from Graph 1 for 40°F required temperature is 8.5.

Step VI **R_p** $= Q_v \div Q_h$
$= 27.5 \div 8.5$
$= 3.24$ feet per heater valve

Step VII **L_h** $= N_v \times R_p$
$= 2 \times 3.24$
$= 6.5'$

Heat Tracing Flanges

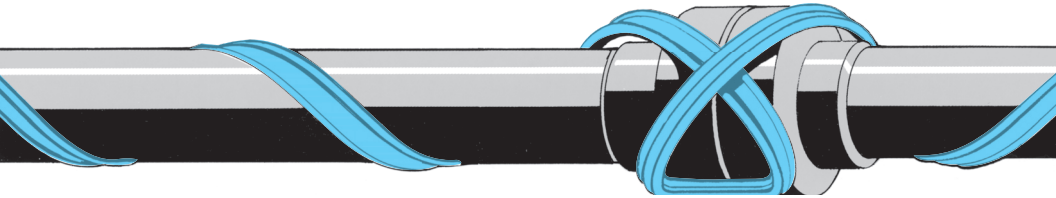

Heater Allowances for Insulated Pipe Flanges, Fittings and Hangers

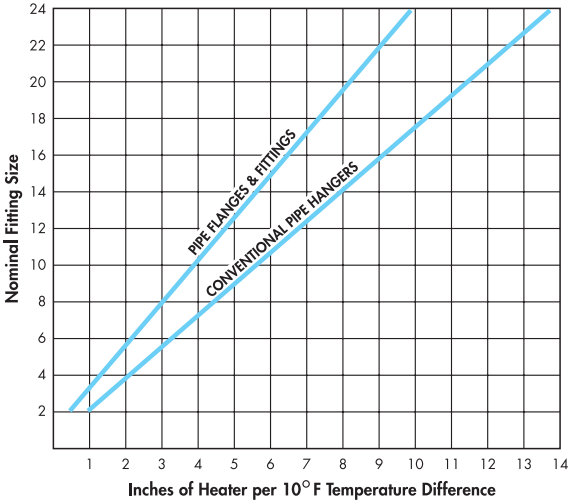

To determine the amount of RSCC self-regulating heating cable required to heat trace an insulated pipe flange, fitting or hanger, simply find the size on the verticle axis, read across to the appropriate device, then read down to the horizontal axis to determine the amount of cable required per 10°F temperature difference. Multiply the temperature difference by this value and divide by ten to get the inches of cable to use per device. Hanger sizing is determined by the width of the hanger.

Example: for 60°F temperature difference:

(2) 10" flanges (4" heater per 10 degrees difference); 2 x 4 x 60/10 = 48.0"

(1) 10" fitting (4" heater per 10 degrees difference); 1 x 4 x 60/10 = 24.0"

(4) 7" wide hangers (4" heater per 10 degrees difference); 4 x 4 x 60/10 = 96"

Total 168"

Total Allowance Required = 14.0'

Pipe flanges, fittings and hangers act as heat sink devices in a heat trace system. Allowances must be made for these devices to maintain a consistent and operational system.

For pipe flanges and fittings under two inches in size use four inches of heater per device. For hangers under two inches in size use six inches of heater per device.

Positioning and Attachment of Heating Element

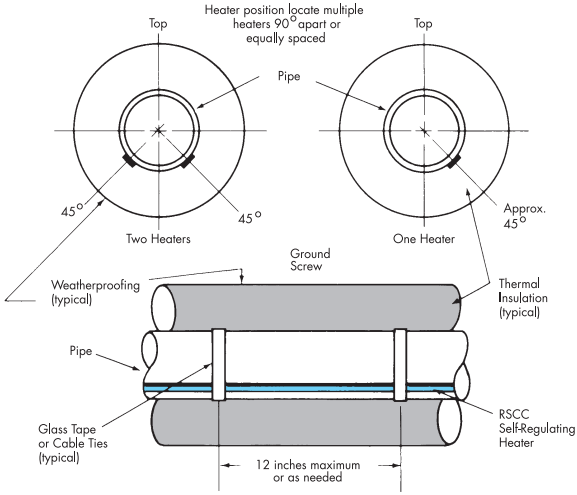

Spiral Installation of Heating Element

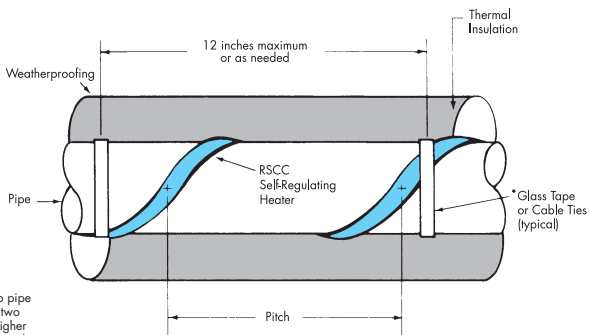

Note:
1. If ratio of heater footage to pipe is greater than 1.5 — use two parallel heaters or select higher wattage heater. If ratio is less than 1.0 — use one parallel heater.
2. When installing the heater on non-metal pipe secure the heater to the pipe with aluminum tape. Refer to pitch chart on isometric drawings for proper pitch length.

***Glass Tape P/N 1528-01017, 1528-01019**

Power Connection Kit Mounting Detail Ordinary and Hazardous Areas

Connection Kits

P/N 1548-40000
(2700 Family)

P/N 1548-41000
(2300 Family)

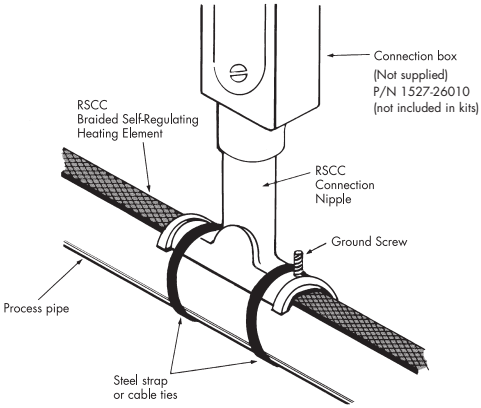

Note:
1. For more specific details and full materials list refer to installation instruction sheet packed with connection kit

Heating Element Termination and Heating Element Tee Splice

End Seal Kit
P/N 1548-50300

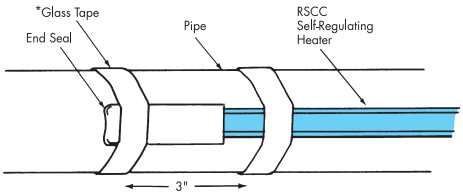

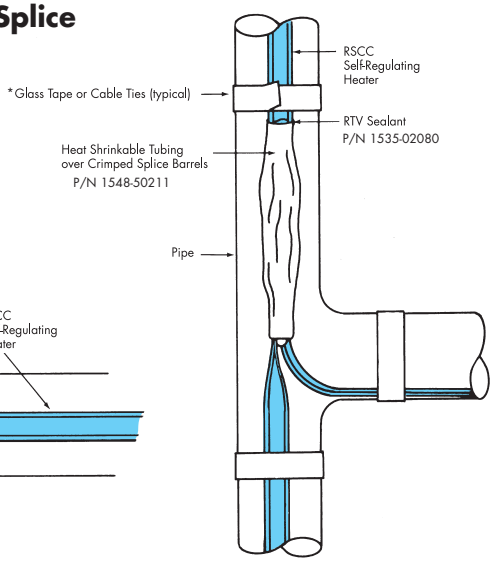

***Glass Tape P/N 1528-01017, 1528-01019**

Thermostat Sensor Positioning and Attachment on Tanks

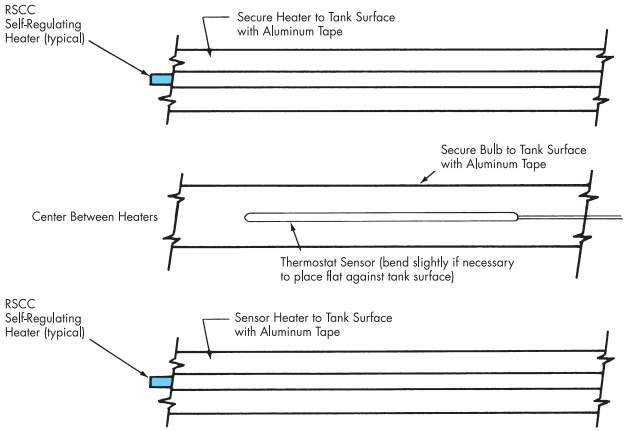

Positioning and Attachment of Thermostat Sensor on Pipe

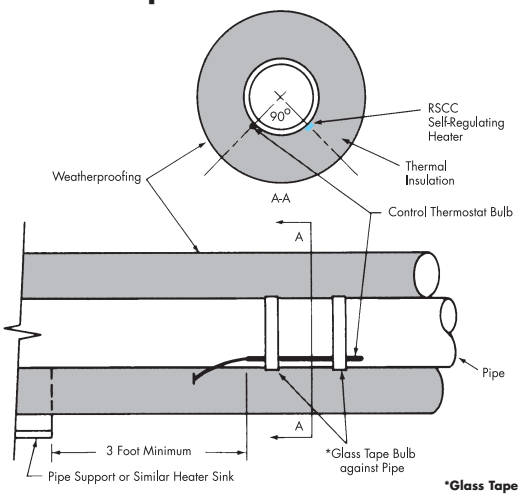

***Glass Tape P/N 1528-01017, 1528-01019**

Heat Tracing of Fittings, Valves and Process Equipment

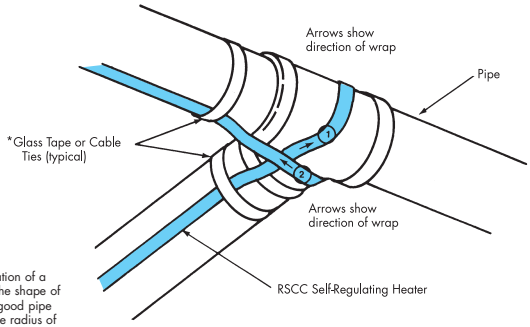

Note:
This detail is shown as an illustration of a method of taking advantage of the shape of a piping configuration to attain good pipe contact. To simply trace the inside radius of the corner would not be considered correct. Although a tee-splice might also be used to trace the third leg of the tee. The objective of this detail is to emphasize that it is advisable to get more heater on any area where the thermal insulation might not be fitted as well as on straight pipe. This method is intended to be used on other fittings besides tees.

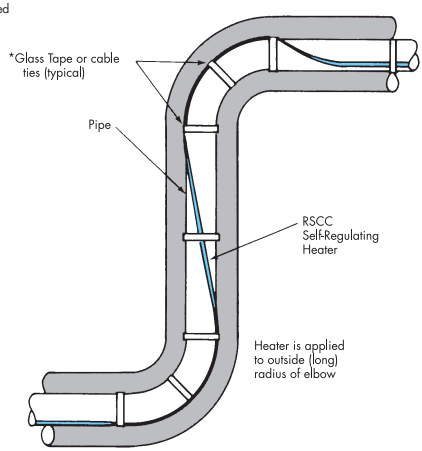

***Glass Tape P/N 1528-01017, 1528-01019**

Heat Tracing of Fittings
Valves and Process Equipment

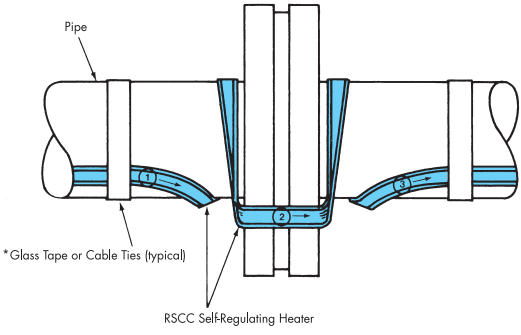

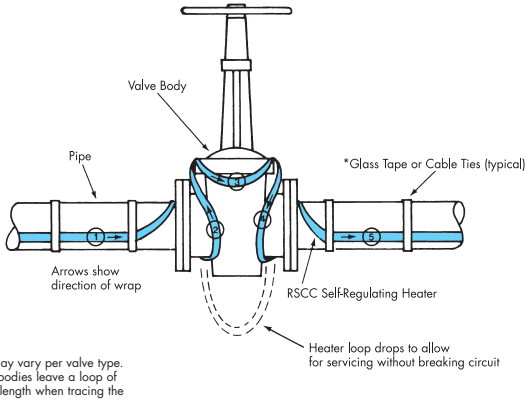

Notes:
1. Exact configuration may vary per valve type.
2. For removable valve bodies leave a loop of tracing of the proper length when tracing the pipe.
3. See installation chart for correct amount of tracing per valve size.
4. Take care to keep the flat side of the heater in as good physical contact with the valve body as possible.
5. Fully insulate and weather protect.

***Glass Tape P/N 1528-01017, 1528-01019**

Connection Kits

P/N 1548-40000
(2700 Family)

P/N 1548-41000
(2300 Family)

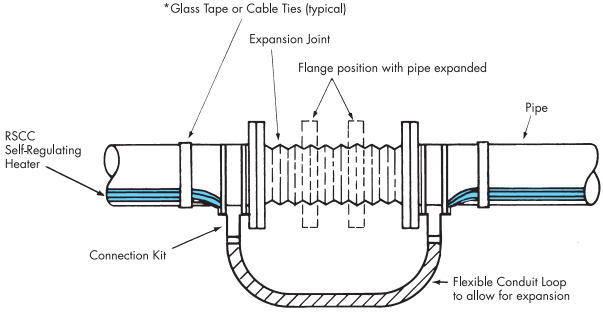

Notes:
1. See National Electrical Code paragraph 427-12(E).
2. Fully insulate and weatherproof (if outdoors).

Note:
Heater must be pulled thru flexible conduit to avoid splicing — if necessary to splice heater a junction box will be required.

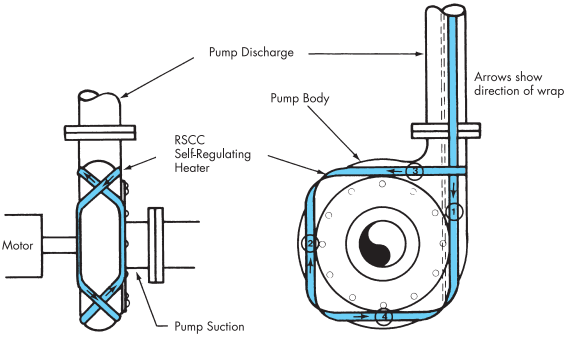

Note:
Use fiberglass or aluminum tape to hold tracer in place on pump body.

Note:
Fully insulate and weather protect.

***Glass Tape P/N 1528-01017, 1528-01019**

Heat Tracing Around Pipe Supports

Note:
All forms of rigid pipe supports directly in contact with the pipe surface act as a heat sink. Heat tracing should be doubled over at these points and the supports should be insulated as much as practicable to limit heat loss.

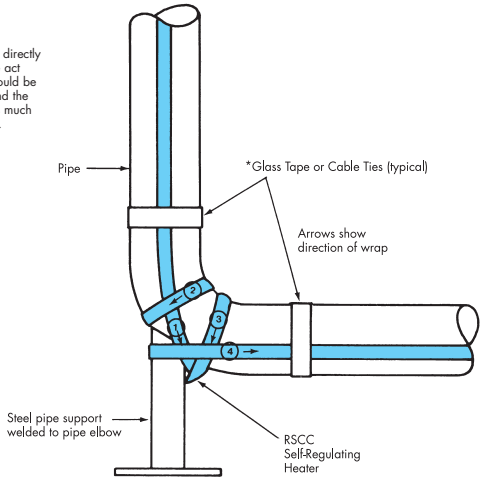

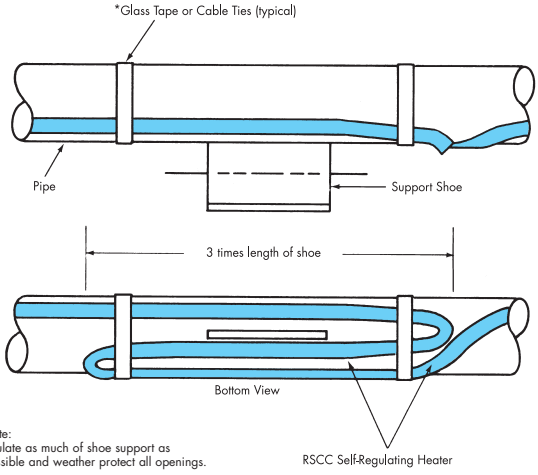

Note:
Insulate as much of shoe support as possible and weather protect all openings.

***Glass Tape P/N 1528-01017, 1528-01019**

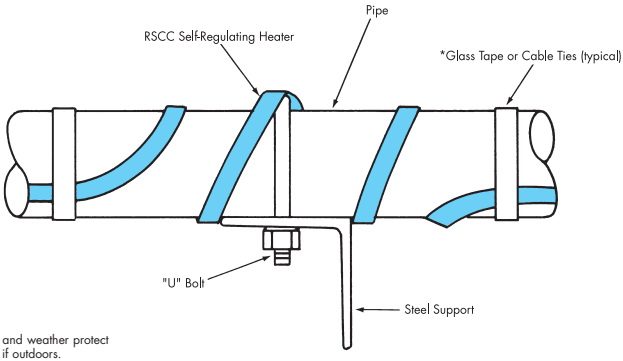

Note:
Fully insulate and weather protect pipe support if outdoors.

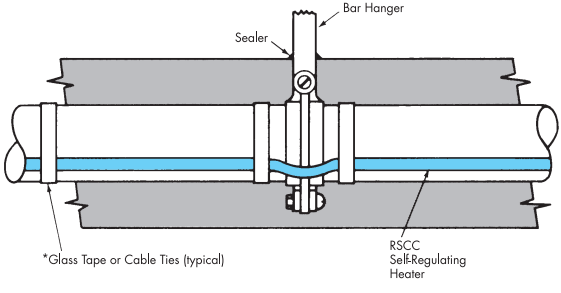

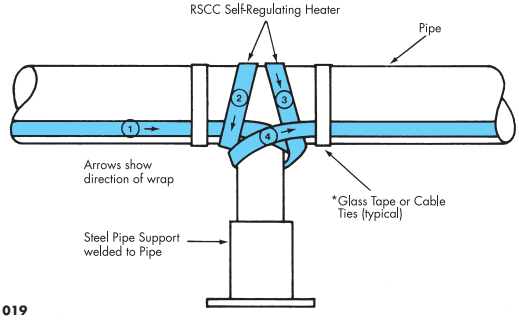

***Glass Tape P/N 1528-01017, 1528-01019**

Heat Tracing of Line Mounted Instruments

Connection Kits

P/N 1548-40000
(2700 Family)

P/N 1548-41000
(2300 Family)

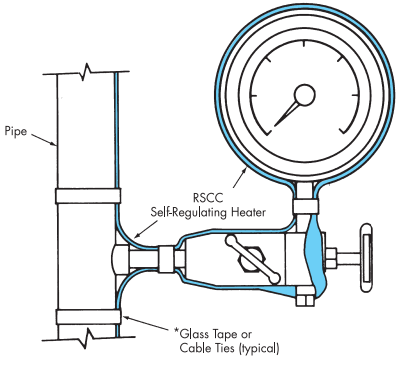

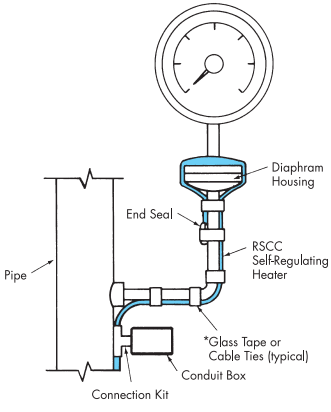

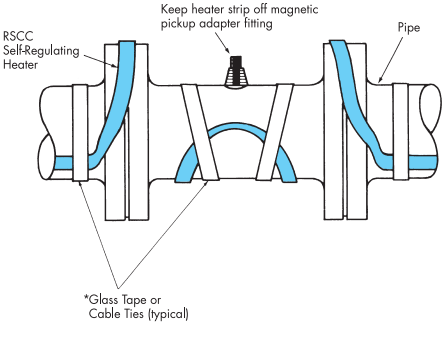

Note:
Treat turbine flow meter as a valve of the same pipe diameter. Leave a loop of material the same as for a valve

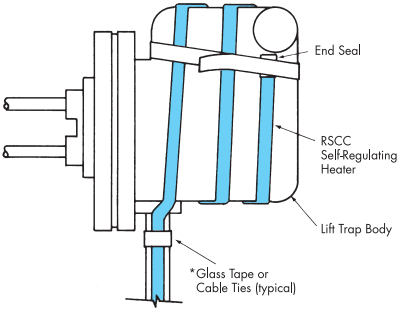

***Glass Tape P/N 1528-01017, 1528-01019**

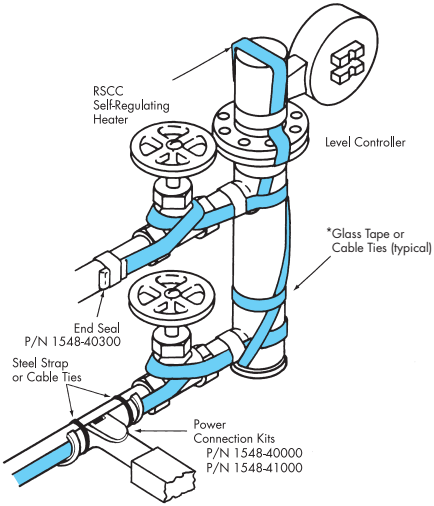

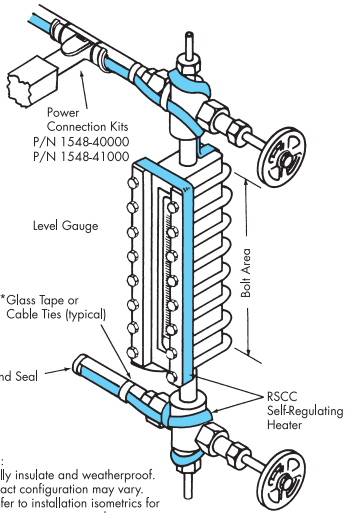

Notes:
1. Fully insulate and weatherproof.
2. Exact configuration may vary.
3. Refer to installation isometrics for proper tracer type and amount.
4. Where the heater is applied in the region designated as "Bolt Area" aluminum tape should be used to aid heat transfer because of the excessively irregular surface.

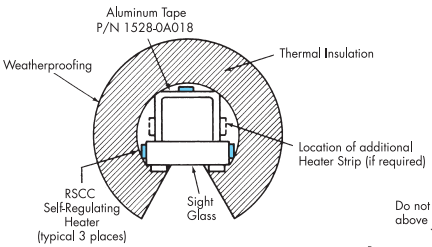

Cross sectional view of thermal insulation and gauge

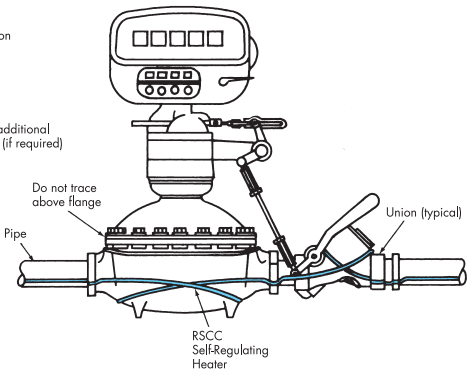

***Glass Tape P/N 1528-01017, 1528-01019**

Heaters Wired Directly to Thermostat

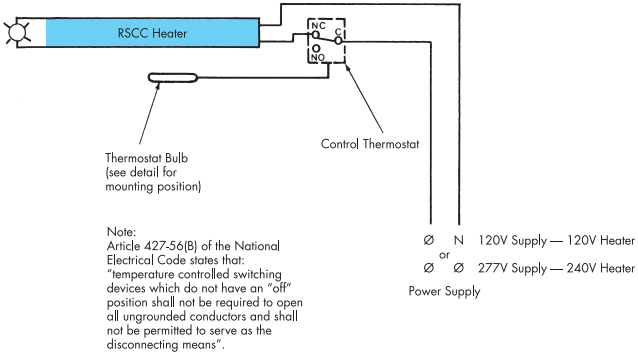

Note:
Article 427-56(B) of the National Electrical Code states that: "temperature controlled switching devices which do not have an "off" position shall not be required to open all ungrounded conductors and shall not be permitted to serve as the disconnecting means".

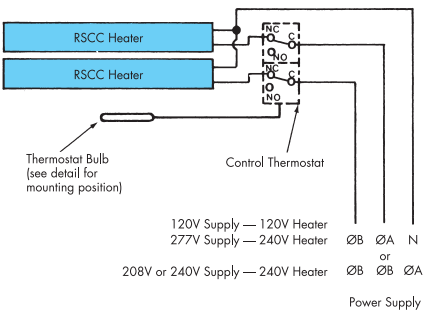

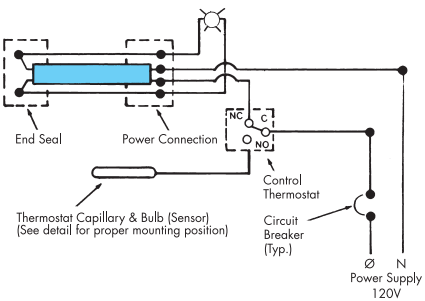

Heaters Wired with 3 Pole Contactor

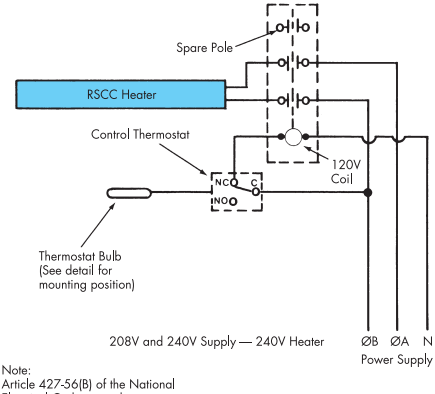

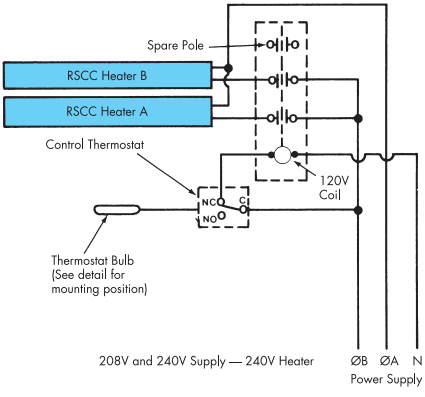

Note:
Article 427-56(B) of the National Electrical Code states that: "temperature controlled switching devices which do not have an "off" position shall not be required to open all ungrounded conductors and shall not be permitted to serve as the disconnecting means".

Note:
Additional heaters may be added to any circuit provided the total load does not exceed contact rating.

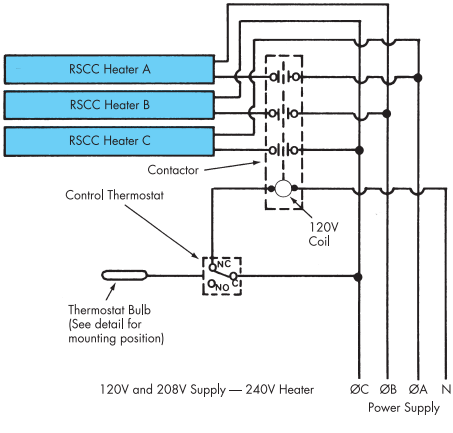

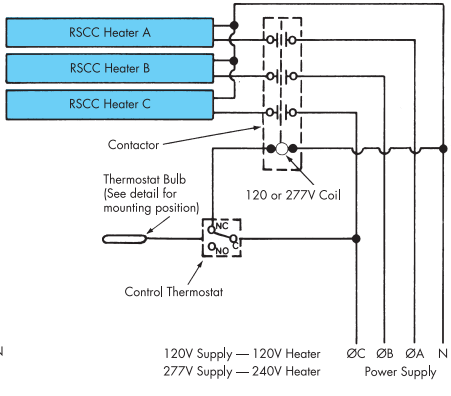

ISO 9001 REGISTERED

Heat Trace Products, LLC

ISO 9001 REGISTERED

233 Florence Street
Leominster, MA 01453
Tel: 978 534-2810
Fax: 978-534-2819
www.rscc-heattrace.com

0419-32000